Bridge Design & Assessment

Abutment Design Example to BD 30

Design the fixed and free end cantilever abutments to the 20m span deck shown to carry HA and 45 units of HB loading. Analyse the abutments using a unit strip method. The bridge site is located south east of Oxford (to establish the range of shade air temperatures).

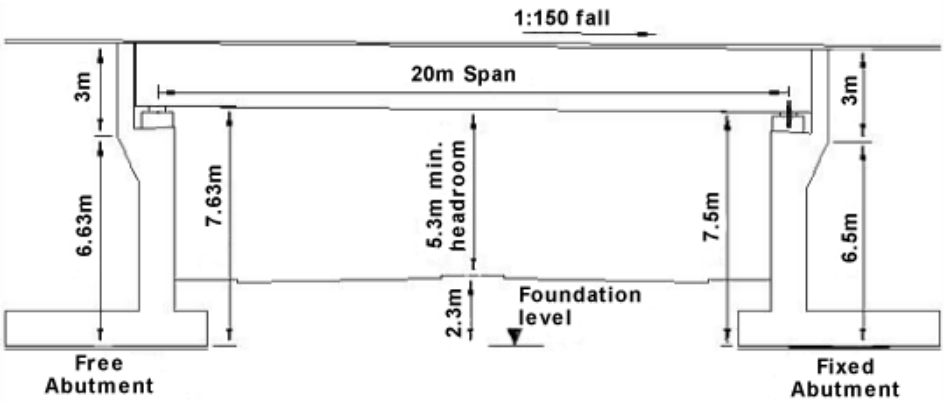

The ground investigation report shows suitable founding strata about 9.5m below the proposed road level. Test results show the founding strata to be a cohesionless soil having an angle of shearing resistance (φ) = 30° and a safe bearing capacity of $400kN/m^2$.

Backfill material will be Class 6N with an effective angle of internal friction (ϕ') = 35° and density (γ) = $19kN/m^3$.

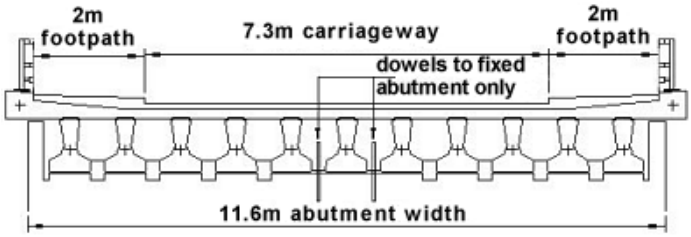

The proposed deck consists of 11No. Y4 prestressed concrete beams and concrete deck slab as shown.

Loading From the Deck

A grillage analysis gave the following reactions for the various load cases:

	Critical Reaction Under One Beam		Total Reaction on Each Abutment	
	Nominal Reaction (kN)	Ultimate Reaction (kN)	Nominal Reaction (kN)	Ultimate Reaction (kN)
Concrete Deck	180	230	1900	2400
Surfacing	30	60	320	600
HA udl+kel	160	265	1140	1880
45 units HB	350	500	1940	2770

Nominal loading on 1m length of abutment:
Deck Dead Load = (1900 + 320) / 11.6 = **191kN/m**
HA live Load on Deck = 1140 / 11.6 = **98kN/m**
HB live Load on Deck = 1940 / 11.6 = **167kN/m**

From BS 5400 Part 2 Figures 7 and 8 the minimum and maximum shade air temperatures are -19 and $+37^oC$ respectively.
For a Group 4 type strucutre (see fig. 9) the corresponding minimum and maximum effective bridge temperatures are -11 and $+36^oC$ from tables 10 and 11.
Hence the temperature range = 11 + 36 = 47^oC.
From Clause 5.4.6 the range of movement at the free end of the 20m span deck = $47 \times 12 \times 10^{-6} \times 20 \times 10^3$ = 11.3mm.
The ultimate thermal movement in the deck will be ± [(11.3 / 2) γf_3 γf_L] = ±[11.3 x 1.1 x 1.3 /2] = ± 8mm.

Option 1 - Elastomeric Bearing:
With a maximum ultimate reaction = 230 + 60 + 500 = 790kN then a suitable elastomeric bearing would be Ekspan's Elastomeric Pad Bearing EKR35:

- Maximum Load = 1053kN
- Shear Deflection = 13.3mm
- Shear Stiffness = 12.14kN/mm
- Bearing Thickness = 19mm

Note: the required shear deflection (8mm) should be limited to between 30% to 50% of the thickness of the bearing. The figure quoted in the catalogue for the maximum shear deflection is 70% of the thickness.
A tolerance is also required for setting the bearing if the ambient temperature is not at the mid range temperature. The design shade air temperature range will be -19 to +37°C which would require the bearings to be installed at a shade air temperature of [(37+19)/2 -19] = 9°C to achieve the ± 8mm movement.
If the bearings are set at a maximum shade air temperature of 16°C then, by proportion the deck will expand 8x(37-16)/[(37+19)/2] = 6mm and contract 8x(16+19)/[(37+19)/2] = 10mm.
Let us assume that this maximum shade air temperature of 16°C for fixing the bearings is specified in the Contract and design the abutments accordingly.
Horizontal load at bearing for 10mm contraction = 12.14 x 10 = 121kN.
This is an ultimate load hence the nominal horizontal load = 121 / 1.1 / 1.3 = 85kN at each bearing.
Total horizontal load on each abutment = 11 x 85 = 935 kN ≡ 935 / 11.6 = **81kN/m**.

Alternatively using BS 5400 Part 9.1 Clause 5.14.2.6:
$H = AG\delta_r/t_q$
Using the Ekspan bearing EKR35

- Maximum Load = 1053kN
- Area = 610 x 420 = 256200mm^2
- Nominl hardness = 60 IRHD
- Bearing Thickness = 19mm

Shear modulus G from Table 8 = 0.9N/mm^2
H = 256200 x 0.9 x 10^{-3} x 10 / 19 = 121kN
This correllates with the value obtained above using the shear stiffness from the manufacturer's data sheet.

Option 2 - Sliding Bearing:
With a maximum ultimate reaction of 790kN and longitudinal movement of ± 8mm then a suitable bearing from the Ekspan EA Series would be /80/210/25/25:

- Maximum Load = 800kN
- Base Plate A dimension = 210mm
- Base Plate B dimension = 365mm
- Movement ± X = 12.5mm

BS 5400 Part 2 - Clause 5.4.7.3:
Average nominal dead load reaction = (1900 + 320) / 11 = 2220 / 11 = 200kN
Contact pressure under base plate = 200000 / (210 x 365) = 3N/mm^2
As the mating surface between the stainless steel and PTFE is smaller than the base plate then the pressure between the sliding faces will be in the order of 5N/mm^2.
From Table3 of BS 5400 Part 9.1 the Coefficient of friction = 0.08 for a bearing stress of 5N/mm^2
Hence total horizontal load on each abutment when the deck expands or contracts = 2220 x 0.08 = 180kN ≡ 180 / 11.6 = **16kN/m**.

Traction and Braking Load - BS 5400 Part 2 Clause 6.10:
Nominal Load for HA = 8kN/m x 20m + 250kN = 410kN
Nominal Load for HB = 25% of 45units x 10kN x 4axles = 450kN
450 > 410kN hence HB braking is critical.
Braking load on 1m width of abutment = 450 / 11.6 = **39kN/m**.
When this load is applied on the deck it will act on the fixed abutment only.

Skidding Load - BS 5400 Part 2 Clause 6.11:
Nominal Load = 300kN
300 < 450kN hence braking load is critical in the longitudinal direction.
When this load is applied on the deck it will act on the fixed abutment only.

Loading at Rear of Abutment

Backfill
For Stability calculations use active earth pressures = $K_a \gamma h$

K_a for Class 6N material = (1-Sin35) / (1+Sin35) = 0.27

Density of Class 6N material = 19kN/m^3

Active Pressure at depth h = 0.27 x 19 x h = 5.13h kN/m^2

Hence Fb = 5.13h^2/2 = 2.57h^{2}kN/m

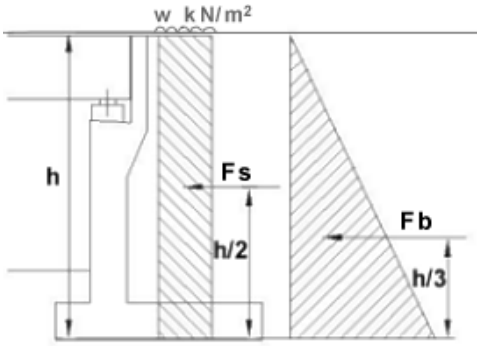

Surcharge - BS 5400 Part 2 Clause 5.8.2:

For HA loading surcharge = **10 kN/m^2**

For HB loading surcharge = **20 kN/m^2**

Assume a surchage loading for the compaction plant to be equivalent to 30 units of HB

Hence Compaction Plant surcharge = **12 kN/m^2**.

For surcharge of w kN/m^2 :

Fs = K_a w h = 0.27wh kN/m

1) Stability Check

Initial Sizing for Base Dimensions

There are a number of publications that will give guidance on base sizes for free standing cantilever walls, Reynolds's Reinforced Concrete Designer's Handbook being one such book.

Alternatively a simple spreadsheet will achieve a result by trial and error.

Load Combinations

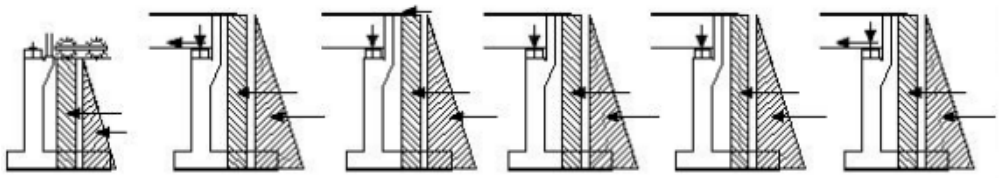

CASE 1	CASE 2	CASE 3	CASE 4	CASE 5	CASE 6
Backfill + Construction surcharge	Backfill + HA surcharge + Deck dead load + Deck contraction	Backfill + HA surcharge + Braking behind abutment + Deck dead load	Backfill + HB surcharge + Deck dead load	Backfill + HA surcharge + Deck dead load + HB on deck	Fixed Abutment Only Backfill + HA surcharge + Deck dead load + HA on deck + Braking on deck

CASE 1 - Fixed Abutment

Density of reinforced concrete = 25kN/m^3.

Weight of wall stem = 1.0 x 6.5 x 25 = 163kN/m

Weight of base = 6.4 x 1.0 x 25 = 160kN/m

Weight of backfill = 4.3 x 6.5 x 19 = 531kN/m

Weight of surcharge = 4.3 x 12 = 52kN/m

Backfill Force Fb = 0.27 x 19 x 7.5^2 / 2 = 144kN/m

Surcharge Force Fs = 0.27 x 12 x 7.5 = 24 kN/m

Restoring Effects:

	Weight	Lever Arm	Moment About A
Stem	163	1.6	261
Base	160	3.2	512
Backfill	531	4.25	2257
Surcharge	52	4.25	221
Σ =	906	Σ =	3251

Overturning Effects:

	F	Lever Arm	Moment About A
Backfill	144	2.5	361
Surcharge	24	3.75	91
Σ =	168	Σ =	452

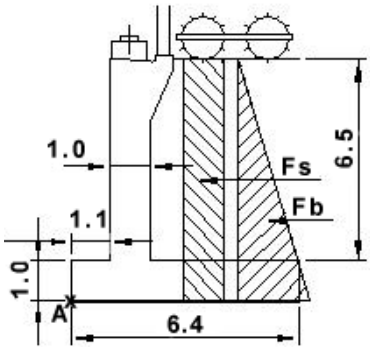

Factor of Safety Against Overturning = 3251 / 452 = 7.2 > 2.0 ∴ OK.
For sliding effects:
Active Force = Fb + Fs = 168kN/m
Frictional force on underside of base resisting movement = W tan(φ) = 906 x tan(30°) = 523kN/m
Factor of Safety Against Sliding = 523 / 168 = 3.1 > 2.0 ∴ OK.

Bearing Pressure:
Check bearing pressure at toe and heel of base slab = (P / A) ± (P x e / Z) where P x e is the moment about the centre of the base.
P = 906kN/m
A = $6.4m^2/m$
Z = 6.4^2 / 6 = $6.827m^3/m$
Nett moment = 3251 - 452 = 2799kNm/m
Eccentricity (e) of P about centre-line of base = 3.2 - (2799 / 906) = 0.111m
Pressure under base = (906 / 6.4) ± (906 x 0.111 / 6.827)
Pressure under toe = 142 + 15 = $157kN/m^2$ < $400kN/m^2$ ∴ OK.
Pressure under heel = 142 - 15 = $127kN/m^2$

Hence the abutment will be stable for Case 1.

Analysing the fixed abutment with Load Cases 1 to 6 and the free abutment with Load Cases 1 to 5 using a simple spreadsheet the following results were obtained:

Fixed Abutment:

	F of S Overturning	F of S Sliding	Bearing Pressure at Toe	Bearing Pressure at Heel
Case 1	7.16	3.09	156	127
Case 2	2.87	2.13	386	5
Case 2a	4.31	2.64	315	76
Case 3	3.43	2.43	351	39
Case 4	4.48	2.63	322	83
Case 5	5.22	3.17	362	81
Case 6	3.80	2.62	378	43

Free Abutment:

	F of S Overturning	F of S Sliding	Bearing Pressure at Toe	Bearing Pressure at Heel
Case 1	7.15	3.09	168	120
Case 2	2.91	2.14	388	7
Case 2a	4.33	2.64	318	78
Case 3	3.46	2.44	354	42
Case 4	4.50	2.64	325	84
Case 5	5.22	3.16	365	82

It can be seen that the use of elastomeric bearings (Case 2) will govern the critical design load cases on the abutments. We shall assume that there are no specific requirements for using elastomeric bearings and design the abutments for the lesser load effects by using sliding bearings.

2) Wall and Base Design

Loads on the back of the wall are calculated using 'at rest' earth pressures. Serviceability and Ultimate load effects need to be calculated for the load cases 1 to 6 shown above. Again, these are best carried out using a simple spreadsheet.
Using the Fixed Abutment Load Case 1 again as an example of the calculations:
Wall Design
K_o = 1 - Sin(ϕ') = 1 - Sin(35°) = 0.426
γ_{fL} for horizontal loads due to surcharge and backfill from BS 5400 Part 2 Clause 5.8.1.2:
Serviceability = 1.0

Ultimate = 1.5
γ_{f3} = 1.0 for serviceability and 1.1 for ultimate (from BS 5400 Part 4 Clauses 4.2.2 and 4.2.3)
Backfill Force Fb on the rear of the wall = 0.426 x 19 x 6.5^2 / 2 = 171kN/m
Surcharge Force Fs on the rear of the wall = 0.426 x 12 x 6.5 = 33kN/m
At the base of the Wall:
Serviceability moment = (171 x 6.5 / 3) + (33 x 6.5 / 2) = 371 + 107 = **478kNm/m**
Ultimate moment = 1.1 x 1.5 x 478 = **789kNm/m**
Ultimate shear = 1.1 x 1.5 x (171 + 33) = **337kN/m**

Analysing the fixed abutment with Load Cases 1 to 6 and the free abutment with Load Cases 1 to 5 using a simple spreadsheet the following results were obtained for the design moments and shear at the base of the wall:

Fixed Abutment:

	Moment SLS Dead	Moment SLS Live	Moment ULS	Shear ULS
Case 1	371	108	790	337
Case 2a	829	258	1771	566
Case 3	**829**	**486**	**2097**	596
Case 4	829	308	1877	**602**
Case 5	829	154	1622	543
Case 6	829	408	1985	599

Free Abutment:

	Moment SLS Dead	Moment SLS Live	Moment ULS	Shear ULS
Case 1	394	112	835	350
Case 2a	868	265	1846	581
Case 3	**868**	**495**	**2175**	612
Case 4	868	318	1956	**619**
Case 5	868	159	1694	559

Concrete to BS 8500:2006
Use strength class C32/40 with water-cement ratio 0.5 and minimum cement content of 340kg/m^3 for exposure condition XD2.
Nominal cover to reinforcement = 60mm (45mm minimum cover plus a tolerance Δ_c of 15mm). Reinforcement to BS 4449:2005 Grade B500B: f_y = 500N/mm^2

Design for critical moments and shear in Free Abutment:
Reinforced concrete walls are designed to BS 5400 Part 4 Clause 5.6.
Check classification to clause 5.6.1.1:
Ultimate axial load in wall from deck reactions = 2400 + 600 + 2770 = 5770 kN
$0.1f_{cu}A_c$ = 0.1 x 40 x 10^3 x 11.6 x 1 = 46400 kN > 5770
∴ design as a slab in accordance with clause 5.4

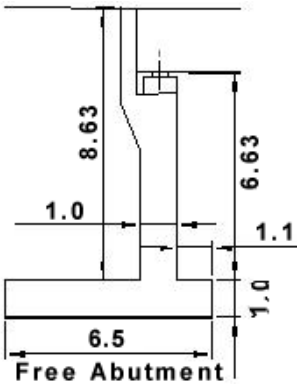

Bending

BS 5400 Part 4 Clause 5.4.2 → for reisitance moments in slabs design to clause 5.3.2.3:
z = {1 - [$1.1f_yA_s$) / (f_{cu}bd)]} d
Use **B40 @ 150 c/c**:
A_s = 8378mm^2/m, d = 1000 - 60 - 20 = 920mm
z = {1 - [1.1 x 500 x 8378) / (40 x 1000 x 920)]} d = 0.875d < 0.95d ∴ OK
Mu = $(0.87f_y)A_sz$ = 0.87 x 500 x 8378 x 0.875 x 920 x 10^{-6} = **2934kNm/m** > 2175kNn/m ∴ OK

Carrying out the crack control calculation to Clause 5.8.8.2 gives a crack width of 0.2mm < 0.25mm.
Also the steel reinforcement and concrete stresses meet the limitations required in clause 4.1.1.3 ∴ serviceability requirements are satisfied.

Shear

Shear requirements are designed to BS 5400 clause 5.4.4:
v = V / (bd) = 619 x 10^3 / (1000 x 920) = 0.673 N/mm^2

No shear reinforcement is required when $v < \xi_s v_c$

$\xi_s = (500/d)^{1/4} = (500 / 920)^{1/4} = 0.86$

$v_c = (0.27/\gamma_m)(100A_s/b_w d)^{1/3}(f_{cu})^{1/3} = (0.27 / 1.25) \times (\{100 \times 8378\} / \{1000 \times 920\})^{1/3} \times (40)^{1/3} = 0.72$

$\xi_s v_c = 0.86 \times 0.72 = 0.62$ N/mm^s < 0.673 hence shear reinforcement should be provided, however check shear at distance H/8 (8.63 / 8 = 1.079m) up the wall.
ULS shear at Section 7H/8 for load case 4 = 487 kN

$v = V / (bd) = 487 \times 10^3 / (1000 \times 920) = 0.53$ N/mm^2 < 0.62
Hence height requiring strengthening = 1.073 x (0.673 - 0.62) / (0.673 - 0.53) = 0.4m < d.
Provide a 500 x 500 splay at the base of the wall with **B32 @ 150c/c** bars in sloping face.

Early Thermal Cracking

Considering the effects of casting the wall stem onto the base slab by complying with the early thermal cracking of concrete to BD 28 then **B16 horizontal lacer bars @ 150 c/c** will be required in both faces in the bottom half of the wall.
Minimum area of secondary reinforcement to Clause 5.8.4.2 = 0.12% of $b_a d$ = 0.0012 x 1000 x 920 = 1104 mm^2/m (use **B16 @ 150c/c** - A_s = 1340mm^2/m)

Base Design

Maximum bending and shear effects in the base slab will occur at sections near the front and back of the wall. Different load factors are used for serviceability and ultimate limit states so the calculations need to be carried out for each limit state using 'at rest pressures'
Using the Fixed Abutment Load Case 1 again as an example of the calculations:

CASE 1 - Fixed Abutment **Serviceability Limit State**
$\gamma_{fL} = 1.0$ $\gamma_{f3} = 1.0$
Weight of wall stem = 1.0 x 6.5 x 25 x 1.0 = 163kN/m
Weight of base = 6.4 x 1.0 x 25 x 1.0 = 160kN/m
Weight of backfill = 4.3 x 6.5 x 19 x 1.0 = 531kN/m
Weight of surcharge = 4.3 x 12 x 1.0 = 52kN/m
B/fill Force Fb = 0.426 x 19 x 7.5^2 x 1.0 / 2 = 228kN/m
Surcharge Force Fs = 0.426 x 12 x 7.5 x 1.0 = 38 kN/m

Restoring Effects:

	Weight	Lever Arm	Moment About A
Stem	163	1.6	261
Base	160	3.2	512
Backfill	531	4.25	2257
Surcharge	52	4.25	221
Σ =	906	Σ =	3251

Overturning Effects:

	F	Lever Arm	Moment About A
Backfill	228	2.5	570
Surcharge	38	3.75	143
Σ =	266	Σ =	713

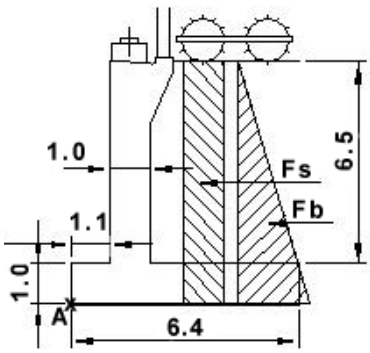

Bearing Pressure at toe and heel of base slab = (P / A) ± (P x e / Z)
P = 906kN/m
A = 6.4m^2/m
Z = 6.4^2 / 6 = 6.827m^3/m
Nett moment = 3251 - 713 = 2538kNm/m
Eccentricity (e) of P about centre-line of base = 3.2 - (2538 / 906) = 0.399m
Pressure under base = (906 / 6.4) ± (906 x 0.399 / 6.827)
Pressure under toe = 142 + 53 = 195kN/m^2
Pressure under heel = 142 - 53 = 89kN/m^2

Pressure at front face of wall = 89 + {(195 - 89) x 5.3 / 6.4} = 177kN/m^2
Pressure at rear face of wall = 89 + {(195 - 89) x 4.3 / 6.4} = 160kN/m^2

SLS Moment at a-a = (177 x 1.1^2 / 2) + ([195 - 177] x 1.1^2 / 3) - (25 x 1.0 x 1.1^2 / 2) = 99kNm/m (tension in bottom face).

SLS Moment at b-b = (89 x 4.3^2 / 2) + ([160 - 89] x 4.3^2 / 6) - (25 x 1.0 x 4.3^2 / 2) - (531 x 4.3 / 2) - (52 x 4.3 / 2) = -443kNm/m (tension in top face).

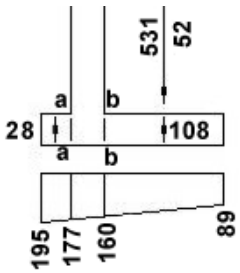

CASE 1 - Fixed Abutment **Ultimate Limit State**
γ_{fL} for concrete = 1.15
γ_{fL} for fill and surcharge(vetical) = 1.2
γ_{fL} for fill and surcharge(horizontal) = 1.5
Weight of wall stem = 1.0 x 6.5 x 25 x 1.15 = 187kN/m
Weight of base = 6.4 x 1.0 x 25 x 1.15 = 184kN/m
Weight of backfill = 4.3 x 6.5 x 19 x 1.2 = 637kN/m
Weight of surcharge = 4.3 x 12 x 1.2 = 62kN/m
Backfill Force Fb = 0.426 x 19 x 7.5^2 x 1.5 / 2 = 341kN/m
Surcharge Force Fs = 0.426 x 12 x 7.5 x 1.5 = 58 kN/m

Restoring Effects:

	Weight	Lever Arm	Moment About A
Stem	187	1.6	299
Base	184	3.2	589
Backfill	637	4.25	2707
Surcharge	62	4.25	264
Σ =	1070	Σ =	3859

Overturning Effects:

	F	Lever Arm	Moment About A
Backfill	341	2.5	853
Surcharge	58	3.75	218
Σ =	399	Σ =	1071

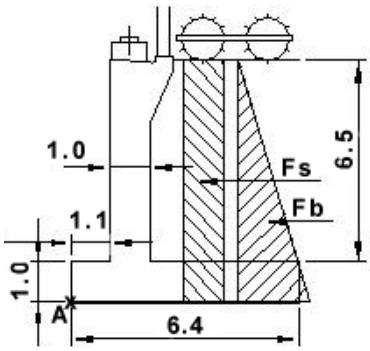

Bearing Pressure at toe and heel of base slab = (P / A) ± (P x e / Z)
P = 1070kN/m
A = 6.4m^2/m
Z = 6.4^2 / 6 = 6.827m^3/m
Nett moment = 3859 - 1071 = 2788kNm/m
Eccentricity (e) of P about centre-line of base = 3.2 - (2788 / 1070) = 0.594m
Pressure under base = (1070 / 6.4) ± (1070 x 0.594 / 6.827)
Pressure under toe = 167 + 93 = 260kN/m^2
Pressure under heel = 167 - 93 = 74kN/m^2
Pressure at front face of wall = 74 + {(260 - 74) x 5.3 / 6.4} = 228kN/m^2
Pressure at rear face of wall = 74 + {(260 - 74) x 4.3 / 6.4} = 199kN/m^2

γ_{f3} = 1.1
ULS Shear at a-a = 1.1 x {[(260 + 228) x 1.1 / 2] - (1.15 x 1.1 x 25)} = 260kN/m
ULS Shear at b-b = 1.1 x {[(199 + 74) x 4.3 / 2] - (1.15 x 4.3 x 25) - 637 - 62} = 259kN/m

ULS Moment at a-a = 1.1 x {(228 x 1.1^2 / 2) + ([260 -

228] x 1.1^2 / 3) - (1.15 x 25 x 1.0 x 1.1^2 / 2)} = 148kNm/m (tension in bottom face).

SLS Moment at b-b = 1.1 x {(74 x 4.3^2 / 2) + ([199 - 74] x 4.3^2 / 6) - (1.15 x 25 x 1.0 x 4.3^2 / 2) - (637 x 4.3 / 2) - (62 x 4.3 / 2)} = -769kNm/m (tension in top face).

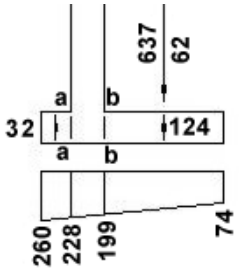

Analysing the fixed abutment with Load Cases 1 to 6 and the free abutment with Load Cases 1 to 5 using a simple spreadsheet the following results were obtained:

Fixed Abutment Base:

	Section a-a			Section b-b		
	ULS Shear	SLS Moment	ULS Moment	ULS Shear	SLS Moment	ULS Moment
Case 1	261	99	147	259	447	768
Case 2a	528	205	302	458	980	1596
Case 3	593	235	340	**553**	**1178**	**1834**
Case 4	550	208	314	495	1003	1700
Case 5	610	241	348	327	853	1402
Case 6	**637**	**255**	**365**	470	1098	1717

Free Abutment Base:

	Section a-a			Section b-b		
	ULS Shear	SLS Moment	ULS Moment	ULS Shear	SLS Moment	ULS Moment
Case 1	267	101	151	266	475	816
Case 2a	534	207	305	466	1029	1678
Case 3	598	236	342	**559**	**1233**	**1922**
Case 4	557	211	317	504	1055	1786
Case 5	**616**	**243**	**351**	335	901	1480

Design for shear and bending effects at sections a-a and b-b for the Free Abutment:

Bending

BS 5400 Part 4 Clause 5.7.3 → design as a slab for reisitance moments to clause 5.3.2.3:
$z = \{1 - [\ 1.1 f_y A_s) / (f_{cu} bd)\ ]\}\ d$
Use B32 @ 150 c/c:
A_s = 5362mm^2/m, d = 1000 - 60 - 16 = 924mm
z = {1 - [1.1 x 500 x 5362) / (40 x 1000 x 924)]} d = 0.92d < 0.95d ∴ OK
Mu = $(0.87 f_y) A_s z$ = 0.87 x 500 x 5362 x 0.92 x 924 x 10^{-6} = **1983kNm/m** > 1922kNm/m ∴ OK
(1983kNm/m also > 1834kNm/m ∴ **B32 @ 150 c/c** suitable for fixed abutment.

For the Serviceability check for Case 3 an approximation of the dead load moment can be obtained by removing the surcharge and braking loads. The spreadsheet result gives the dead load SLS moment for Case 3 as 723kNm, thus the live load moment = 1233 - 723 = 510kNm.
Carrying out the crack control calculation to Clause 5.8.8.2 gives a crack width of 0.27mm > 0.25mm ∴ Fail.
This could be corrected by reducing the bar spacing, but increase the bar size to B40@150 c/c as this is required to avoid the use of links (see below).
Using **B40@150c/c** the crack control calculation gives a crack width of 0.17mm < 0.25mm ∴ OK.
Also the steel reinforcement and concrete stresses meet the limitations required in clause 4.1.1.3 ∴ serviceability requirements are satisfied.

Shear
Shear on Toe - Use Fixed Abutment Load Case 6:
By inspection B32@150c/c will be adequate for the bending effects in the toe (M_{uls} = 365kNm < 1983kNm)
Shear requirements are designed to BS 5400 clause 5.7.3.2(a) checking shear at d away from the front face of the wall to clause 5.4.4.1:
ULS Shear on toe = 1.1 x {(620 + 599) x 0.5 x 0.176 - 1.15 x 1 x 0.176 x 25} = 112kN

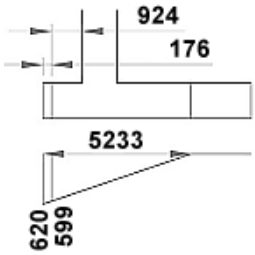

v = V / (bd) = 112 x 10^3 / (1000 x 924) = 0.121 N/mm^2
No shear reinforcement is required when v < $\xi_s v_c$

Reinforcement in tension = **B32 @ 150 c/c**

$\xi_s = (500/d)^{1/4} = (500 / 924)^{1/4} = 0.86$

$v_c = (0.27/\gamma_m)(100A_s/b_wd)^{1/3}(f_{cu})^{1/3} = (0.27 / 1.25) \times (\{100 \times 5362\} / \{1000 \times 924\})^{1/3} \times (40)^{1/3} = 0.62$

$\xi_s v_c = 0.86 \times 0.62 = 0.53$ N/mm^s > 0.121N/mm^s ∴ OK

Shear on Heel - Use Free Abutment Load Case 3:
Shear requirements are designed at the back face of the wall to clause 5.4.4.1:
Length of heel = (6.5 - 1.1 - 1.0) = 4.4m
ULS Shear on heel = 1.1 x {348 x 0.5 x (5.185 - 2.1) - 1.15 x 1 x 4.4 x 25 - 1.2 x 4.4 x (8.63 x 19 + 10)} = 559kN

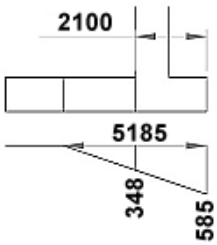

Using B32@150 c/c then:

$v = V / (bd) = 559 \times 10^3 / (1000 \times 924) = 0.605$ N/mm^2

No shear reinforcement is required when $v < \xi_s v_c$

$\xi_s = (500/d)^{1/4} = (500 / 924)^{1/4} = 0.86$

$v_c = (0.27/\gamma_m)(100A_s/b_wd)^{1/3}(f_{cu})^{1/3} = (0.27 / 1.25) \times (\{100 \times 5362\} / \{1000 \times 924\})^{1/3} \times (40)^{1/3} = 0.62$

$\xi_s v_c = 0.86 \times 0.62 = 0.53$ N/mm^s < 0.605N/mm^s ∴ Fail

Rather than provide shear reinforcement try increasing bars to **B40 @ 150 c/c** (also required for crack control as shown above).

$v_c = (0.27/\gamma_m)(100A_s/b_wd)^{1/3}(f_{cu})^{1/3} = (0.27 / 1.25) \times (\{100 \times 8378\} / \{1000 \times 920\})^{1/3} \times (40)^{1/3} = 0.716$

$\xi_s v_c = 0.86 \times 0.716 = 0.616$ N/mm^s > 0.605N/mm^s ∴ OK

Early Thermal Cracking

Considering the effects of casting the base slab onto the blinding concrete by complying with the early thermal cracking of concrete to BD 28 then B16 distribution bars @ 250 c/c will be required.
Minimum area of main reinforcement to Clause 5.8.4.1 = 0.15% of b_ad = 0.0015 x 1000 x 924 = 1386 mm^2/m (use **B20 @ 200c/c** - A_s = 1570mm^2/m).

Local Effects

Curtain Wall
This wall is designed to be cast onto the top of the abutment after the deck has been built. Loading will be applied from the backfill, surcharge and braking loads on top of the wall.
HB braking load to BS 5400 clause 6.10 = 25% x 45units x 10kN on each axle = 112.5kN per axle.
Assume a 45° dispersal to the curtain wall and a maximum dispersal of the width of the abutment (11.6m) then:
1st axle load on back of abutment = 112.5 / 3.0 = 37.5kN/m
2nd axle load on back of abutment = 112.5 / 6.6 = 17.0kN/m
3rd & 4th axle loads on back of abutment = 2 x 112.5 / 11.6 = 19.4kN/m

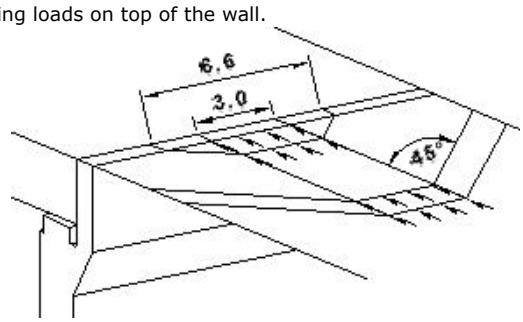

Maximum load on back of abutment = 37.5 + 17.0 + 19.4 = = 73.9kN/m

Bending and Shear at Base of 3m High Curtain Wall

Horizontal load due to HB surcharge = 0.426 x 20 x 3.0 = 25.6 kN/m
Horizontal load due to backfill = 0.426 x 19 x 3.0^2 / 2 = 36.4 kN/m
SLS Moment = (73.9 x 3.0) + (25.6 x 1.5) + (36.4 x 1.0) = 297 kNm/m (36 dead + 261 live)
ULS Moment = 1.1 x {(1.1 x 73.9 x 3.0) + (1.5 x 25.6 x 1.5) + (1.5 x 36.4 x 1.0)} = 392 kNm/m
ULS Shear = 1.1 x {(1.1 x 73.9) + (1.5 x 25.6) + (1.5 x 36.4)} = 192kN/m

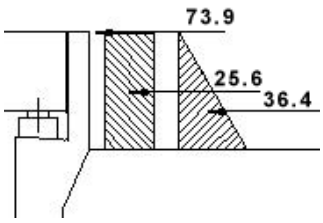

400 thick curtain wall with B32 @ 150 c/c :
M_{ult} = 584 kNm/m > 392 kNm/m ∴ OK

SLS Moment produces crack width of 0.21mm < 0.25 ∴ OK

$\xi_s v_c$ = 0.97 N/mm^2 > v = 0.59 N/mm^2 ∴ Shear OK

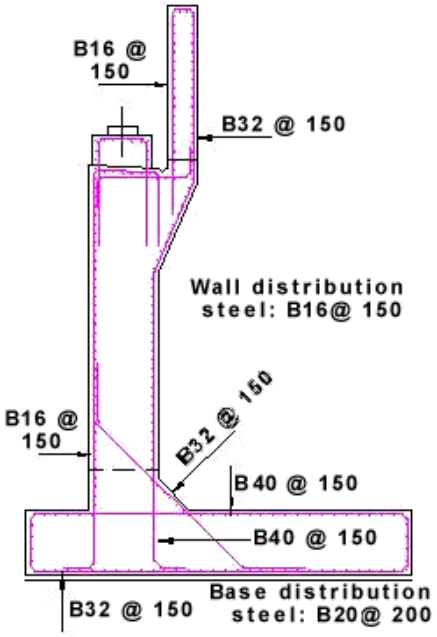

Back to Abutment Tutorial | Back to Tutorial Index

Last Updated : 28/02/11
For more information :
Email: david@childs-ceng.demon.co.uk

DAVID CHILDS B.SC, C.ENG, MICE